ITEM NO.	PART NUMBER	DESCRIPTION	WEIGHT	QTY.
1	C6x10.5 Inters 1 20210705			2
2	C6x10.5 Inters 2 20210705			2
3	C6 w14 plate 20210705			4
4	92620A881			2
5	98023A036			4
6	94895A840			4
7	Pipe 1in sch40 1 20210705			2
8	Plate pipe 1 20210705			4
9	C6x10.5 Inters 4 20210705	C6 PANEL MOUNTING INTERFACE, FRONT LOWER - 3		1
10	91286A377			10
11	98180A150			20
12	93827A249			10
13	93839A825			10

MASS W/O OXIDATION PROTECTION 129[LBF]

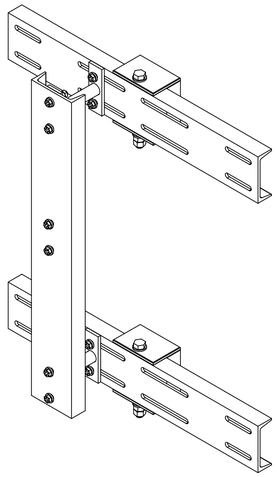

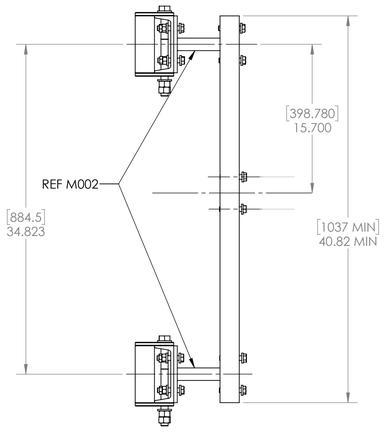

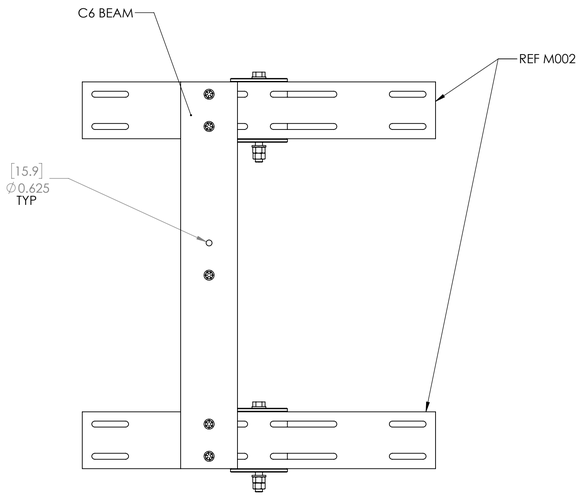

NOTE/S:
DEFINITION:
INT = INTERSECTION
NUMBER OF C6 ASM, M002 IS 12
NUMBER OF C6 ASM, M003 IS 156
NUMBER OF C6 ASM, M004 IS 168
NO SHARP EDGES/CORNERS
W14, ASTM A913 G65, Sy 65[KSI]
W6-BEAMS, Sy 42[KSI] (PERF A572 G42)
C6-BEAMS, Sy 36[KSI]
PLATE/S AISI 1045, Sy 75[KSI] (MIN)
ALUMINIZATION TYPE II (PREF)
GALVINIZE ASTM A123 G100 ACCPTABLE
MASKING OF MATING SURFACES
OIL-SHEEN, SAE 50+, PRIOR TO ASM
NO AGGLOMERATION OF OIL
AL/ALLOY TO STEEL INTERFACE, POLYMER FILM OR OTHER
MINIMIZE/NEUTRALIZE IONIC EXHANGE
BOLT/S ASM G8
CLASS B, AS-BUILT
CAD/DATA IS MASTER

EXAMPLE AMBIENT TEMP [F]	EXAMPLE AMBIENT TEMP [C]	T6061-T6 dL PER 1000[IN]	T6061-T6 dL PER 1000[mm]
45.00	7.22	-0.183	-4.658
59.00	15.00	0.0	0.0
86.00	30.00	0.354	8.984

EXAMPLE:
LET DIM = 47.125[IN] (T6061-T6)
dL = 0.0000131[86 - 59]47.125
dL = 0.0167[IN] [0.4234[mm]]

AT 86[F] THE DIMENSION OF THE PART IS 47.125 + 0.0167 =47.142[IN]

GALVONIC PROTECTION REQUIRED:
ALUMINIZE TYPE II PREFERRED
GALVINIZE G100 ACCEPTABLE
THERMAL SPRAY AS/FOR ASSEMBLED

UNLESS OTHERWISE SPECIFIED:
TOLERANCES:
DIMENSIONS TAKEN AT 59[F]
DIMENSIONS TAKEN AT 15[C]
FRACTIONAL ±0.13[%]
ANGULAR: 0.3[DEG]
TWO PLACE DECIMAL ±0.05[IN]
THREE PLACE DECIMAL ±0.005[IN]
VERIFICATION OF COMPONENTS MUST BE PERFORMED WITH TEMPERATURE COMPENSATION
INTERPRET GEOMETRIC TOLERANCING PER: ASME Y14.5
PARALLEL PLANES MAX 0.002[IN]
FLATNESS MAX 0.002[IN]
FINISH: AS REQUIRED

	NAME	DATE
DRAWN		
CHECKED		
ENG APPR.		
MFG APPR.		
Q.A.		

GAUGE/S:
DRAWINGS ARE AT 59[F] (15[C]): REFER TO MATERIAL SUPPLIER FOR THERMAL EXPANSION COEFFICENT (CTE)
dL(ENG) = (DIM)*(CTE[1/R])*(TEMP-59)
dL(SI) = (DIM)*(CTE[1/K])*(TEMP-15)
***TOLERANCES DO NOT CHANGE

CREO DESIGNS, ENG DPT

TITLE: GLORIOUS CROSS

INT - C6 PANEL CONNECTION - 3

SIZE	DWG. NO.	REV
D	M - 004	1

SCALE: 1:8 SHEET 1 OF 1