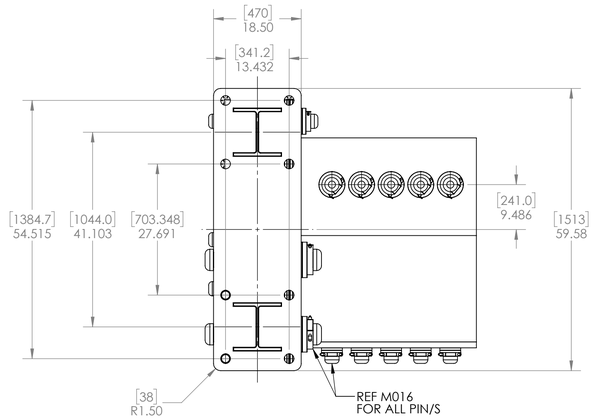

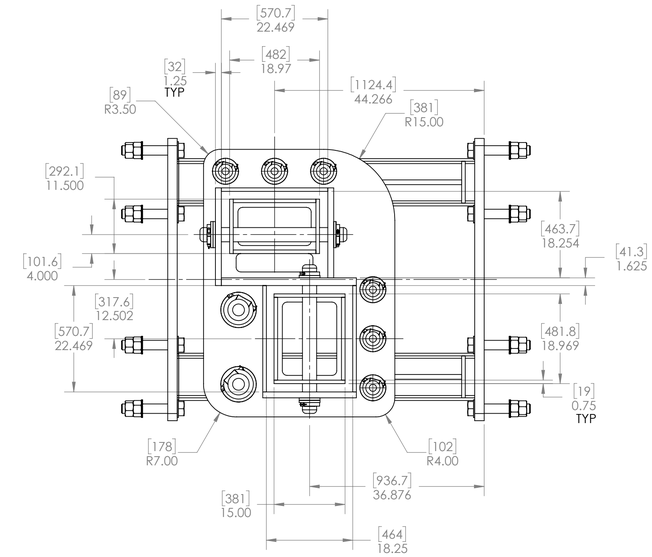

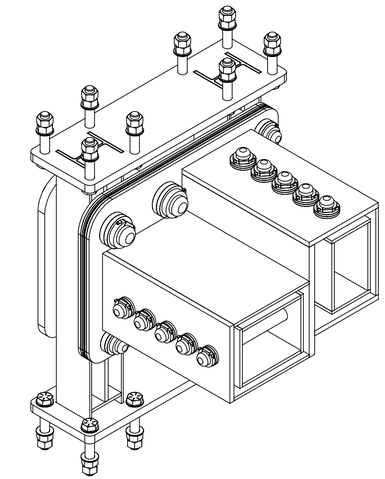

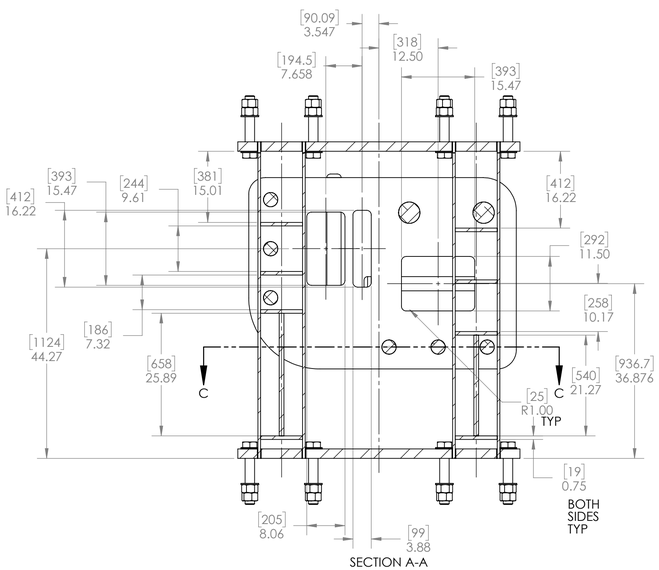

SECTION A-A

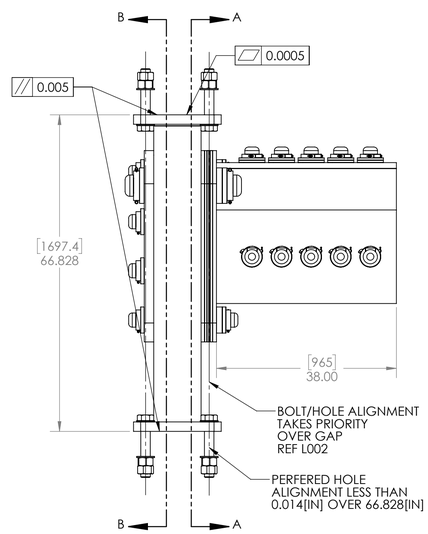

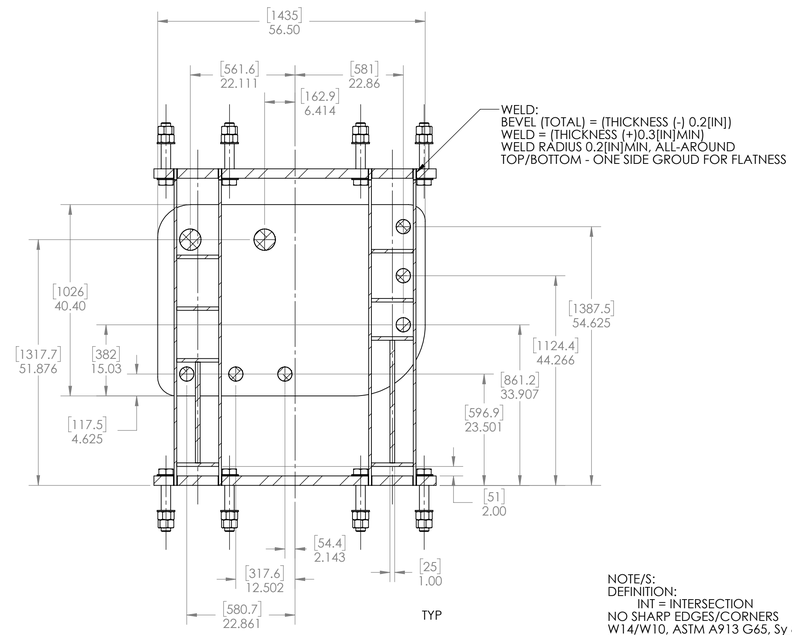

SECTION B-B

WELD:
BEVEL (TOTAL) = (THICKNESS (-) 0.3[IN])
WELD = (BEVEL (+)0.3[IN]MIN)
WELD RADIUS 0.2[IN] MIN
ALL-AROUND
ALL PLATE/S
ANTI-RUST PREPERATION
NO BLEEDING

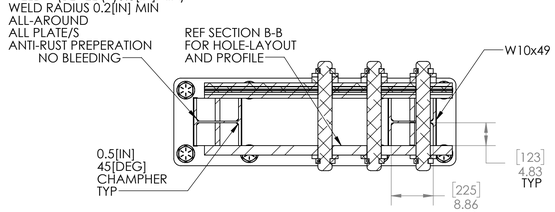

SECTION C-C

NOTE/S:
DEFINITION:
INT = INTERSECTION
NO SHARP EDGES/CORNERS
W14/W10, ASTM A913 G65, Sy 65[KSI]
W6-BEAMS, Sy 42[KSI] (PERF A572 G42)
C6-BEAMS, Sy 36[KSI]
AL, T6061-T6, Sy 40[KSI] MIN
AL, ALLOY, Sy 40[KSI] MIN
PLATE/S AISI 1045, Sy 75[KSI] (MIN)
ALUMINIZATION TYPE II (PREF)
GALVINIZE ASTM A123 G100 ACCPTABLE
MASKING OF MATING SURFACES
OIL-SHEEN, SAE 50+, PRIOR TO ASM
NO AGGLOMERATION OF OIL
AL/ALLOY TO STEEL INTERFACE, POLYMER FILM OR OTHER
MINIMIZE/NEUTRALIZE IONIC EXHANGE
BOLT/S ASM G8
CLASS B, AS-BUILT
CAD/DATA IS MASTER

EXAMPLE AMBIENT TEMP [F]	EXAMPLE AMBIENT TEMP [C]	T6061-T6 dL PER 1000[IN]	T6061-T6 dL PER 1000[mm]
45.00	7.22	-0.183	-4.658
59.00	15.00	0.0	0.0
86.00	30.00	0.354	8.984

EXAMPLE:
LET DIM = 47.125[IN] (T6061-T6)
dL = 0.000013135[6 - 59]47.125
dL = 0.0167[IN] (0.4234[mm])

AT 86[F] THE DIMENSION OF THE PART IS 47.125 + 0.0167 =47.142[IN]

GALVONIC PROTECTION REQUIRED:
ALUMINIZE TYPE II PREFERED
GALVINIZE G100 ACCEPTABLE
THERMAL SPRAY AS/FOR ASSEMBLED

UNLESS OTHERWISE SPECIFIED:
TOLERANCES:
DIMENSIONS TAKEN AT 59[F]
DIMENSIONS TAKEN AT 15[C]
FRACTIONAL ±0.13[%]
ANGULAR: 0.3[DEG]
TWO PLACE DECIMAL ±0.05[IN]
THREE PLACE DECIMAL ±0.005[IN]

VERIFICATION OF COMPONENTS MUST BE PERFORMED WITH TEMPERATURE COMPENSATION

INTERPRET GEOMETRIC TOLERANCING PER: ASME Y14.5

PARALLEL PLANES MAX 0.002[IN]
FLATNESS MAX 0.002[IN]
FINISH: AS REQUIRED

GAUGE/S:
DRAWINGS ARE AT 59[F] (15[C]): REFER TO MATERIAL SUPPLIER FOR THERMAL EXPANSION COEFFICENT (CTE)
dL(EN3) = (DIM)*(CTE)(-K)*(TEMP-59)
dL(S) = (DIM)*(CTE)(-K)*(TEMP-15)
***TOLERANCES DO NOT CHANGE

	NAME	DATE
DRAWN		
CHECKED		
ENG APPR.		
MFG APPR.		
Q.A.		

CREO DESIGNS, ENG DPT

TITLE: GLORIOUS CROSS

INT - C126 LOWER RIGHT CORNER BASE/BRACE

SIZE	DWG. NO.	REV
D	M - 027	1

SCALE: 1:16 | SHEET 1 OF 1