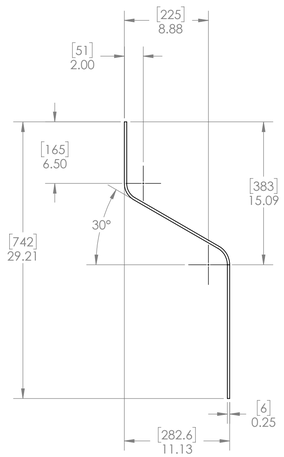

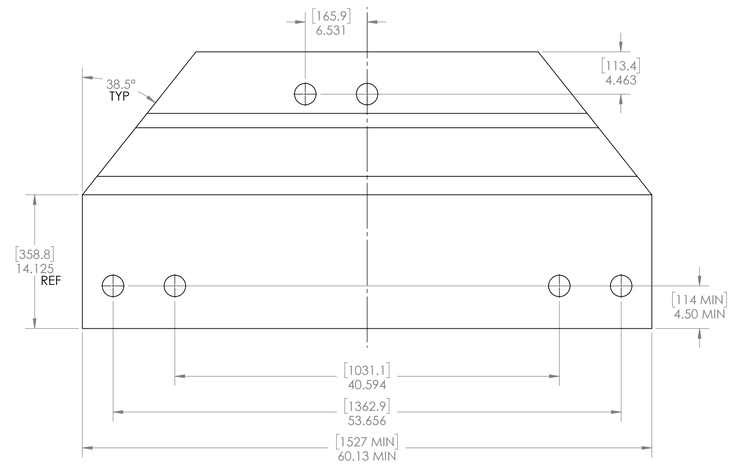

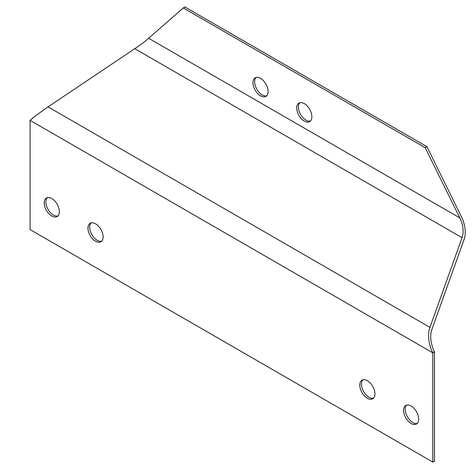

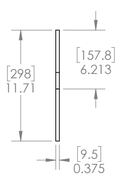

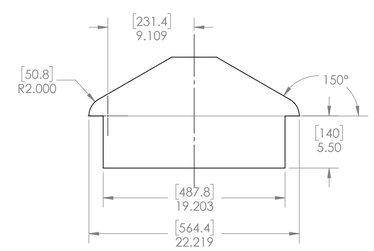

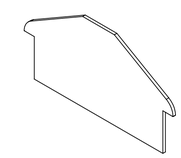

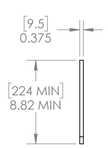

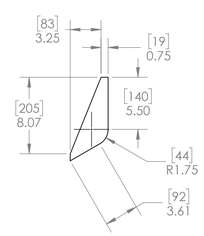

MIN DIM SHOWN

NOTE/S:
DEFINITION:
INT = INTERSECTION
NO SHARP EDGES/CORNERS
AL, T6061-T6, Sy 40[KSI] MIN
AL, ALLOY, Sy 40[KSI] MIN
CLASS B, AS-BUILT
CAD/DATA IS MASTER

EXAMPLE: AMBIENT TEMP [F]	EXAMPLE: AMBIENT TEMP [C]	T6061-T6 dL PER 1000[IN]	T6061-T6 dL PER 1000[mm]
45.00	7.22	-0.183	-4.658
59.00	15.00	0.0	0.0
86.00	30.00	0.354	8.984

EXAMPLE:
LET DIM = 47.125[IN] (T6061-T6)
dL = 0.000013139[IN/-59]47.125
dL = 0.0167[IN] [0.4234[mm]]

AT 86[F] THE DIMENSION OF THE PART IS 47.125 + 0.0167 =47.142[IN]

GALVONIC PROTECTION REQUIRED:
ALUMINIZE TYPE II PREFERRED
GALVINIZE G100 ACCEPTABLE
THERMAL SPRAY AS/FOR ASSEMBLED

UNLESS OTHERWISE SPECIFIED:
TOLERANCES:
DIMENSIONS TAKEN AT 59[F]
DIMENSIONS TAKEN AT 15[C]
FRACTIONAL±0.13[IS]
ANGULAR: 0.3[DEG]
TWO PLACE DECIMAL ±0.05[IN]
THREE PLACE DECIMAL ±0.005[IN]

VERIFICATION OF COMPONENTS MUST BE PERFORMED WITH TEMPERATURE COMPENSATION

INTERPRET GEOMETRIC TOLERANCING PER: ASME Y14.5

PARALLEL PLANES MAX 0.002[IN]
FLATNESS MAX 0.002[IN]
FINISH: AS REQUIRED

	NAME	DATE
DRAWN		
CHECKED		
ENG APPR.		
MFG APPR.		
Q.A.		

GAUGE/S:
DRAWINGS ARE AT 59[F] (15[C]): REFER TO MATERIAL SUPPLIER FOR THERMAL EXPANSION COEFFICENT (CTE)
dL(ENG) = (DIM)*(CTE[1/R])*(TEMP-59)
dL(S) = (DIM)*(CTE[1/R])*(TEMP-15)
***TOLERANCES DO NOT CHANGE

CREO DESIGNS, ENG DPT

TITLE: GLORIOUS CROSS

INT - LOWER BRACKET ANGLE/ARM/BRACE

SIZE	DWG. NO.	REV
D	M - 021	1
SCALE: 1:4		SHEET 1 OF 1

TOP FIGURE

ITEM NO.	PART NUMBER	DESCRIPTION	WEIGHT	QTY.
1	Connect sup i 20200622 2			1

MIDDLE FIGURE

ITEM NO.	PART NUMBER	DESCRIPTION	WEIGHT	QTY.
1	Plate arm angle sup up 1 20210112 2			1

BOTTOM FIGURE

ITEM NO.	PART NUMBER	DESCRIPTION	WEIGHT	QTY.
1	Plate arm angle sup up 2 20210113 2			1