ITEM NO.	PART NUMBER	DESCRIPTION	WEIGHT	QTY.
1	Rib Radius 3 20200515			1
2	Rivet Brazier head for Panel 20200510			136
3	Rib Radius 4 20200515			1

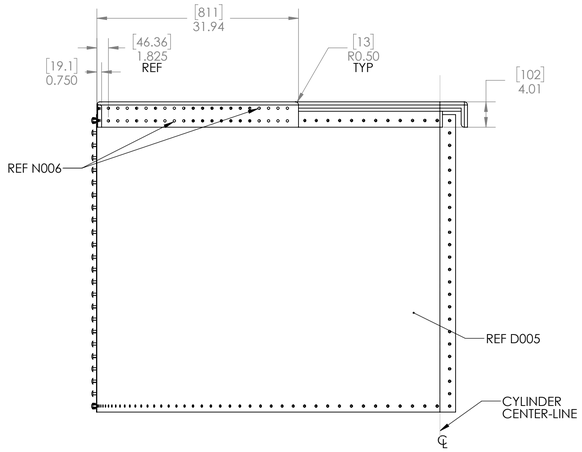

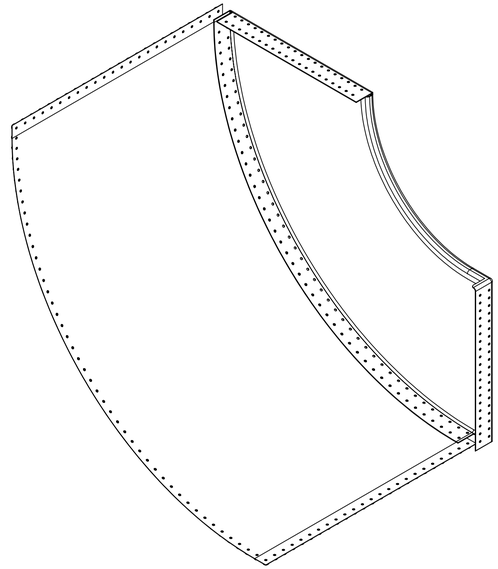

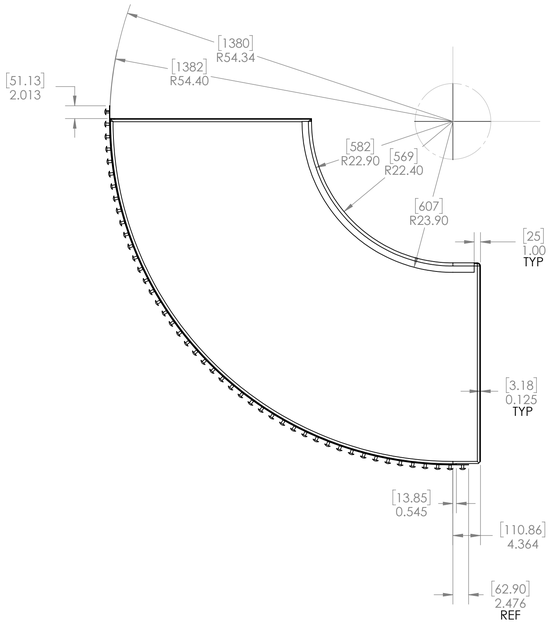

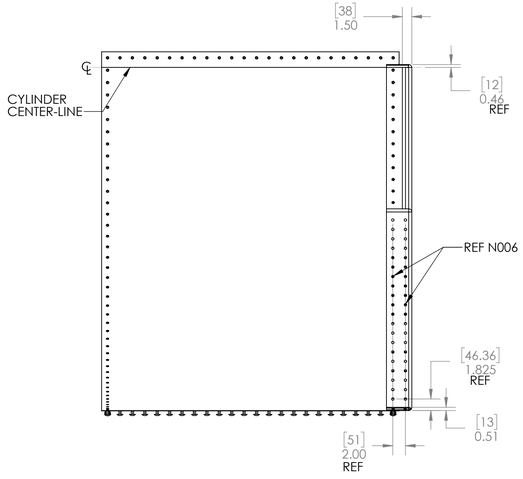

NOTE/S:
NO SHARP EDGES/CORNERS
FORM/SHAPE OF CLASS B PARTS ARE IDEALIZED
ACTUAL TOOLING DRAFT MAY VARY OUTSIDE OF PRINT/TOLERANCE
RIVET/MATING SEGMENTS/ZONES SEPARATION/S TO BE LESS THAN 0.045[IN]
WHERE THE AXIS OF THE RIVET/SARE COLINEAR, THE RIVET-HOLE/S ARE IN-LINE
NO GAP/S ALLOWED AFTER RIVETING
AL, T6061-T6, Sy 40[KSI] MIN
AL, ALLOY, Sy 40[KSI] MIN
CLASS B, AS-BUILT
CLASS A, REF A001, D001
CAD/DATA IS MASTER

EXAMPLE AMBIENT TEMP [F]	EXAMPLE AMBIENT TEMP [C]	T6061-T6 dL PER 1000[IN]	T6061-T6 dL PER 1000[mm]
45.00	7.22	-0.183	-4.658
59.00	15.00	0.0	0.0
86.00	30.00	0.354	8.984

EXAMPLE:
LET DIM = 47.125[IN] (T6061-T6)
dL = 0.000131[86 - 59]47.125
dL = 0.0167[IN] (0.4234[mm])

AT 86[F] THE DIMENSION OF THE PART IS 47.125 + 0.0167 =47.142[IN]

GALVONIC PROTECTION REQUIRED:
ALUMINIZE TYPE II PREFERED
GALVINIZE G100 ACCEPTABLE
THERMAL SPRAY AS/FOR ASSEMBLED

UNLESS OTHERWISE SPECIFIED:
TOLERANCES:
DIMENSIONS TAKEN AT 59[F]
DIMENSIONS TAKEN AT 15[C]
FRACTIONAL ±0.13[%]
ANGULAR: 0.3[DEG]
TWO PLACE DECIMAL ±0.05[IN]
THREE PLACE DECIMAL ±0.005[IN]
VERIFICATION OF COMPONENTS MUST BE PERFORMED WITH TEMPERATURE COMPENSATION
INTERPRET GEOMETRIC TOLERANCING PER: ASME Y14.5
PARALLEL PLANES MAX 0.002[IN]
FLATNESS MAX 0.002[IN]
FINISH: AS REQUIRED

	NAME	DATE
DRAWN		
CHECKED		
ENG APPR.		
MFG APPR.		
Q.A.		

GAUGE/S:
DRAWINGS ARE AT 59[F] (15[C]): REFER TO MATERIAL SUPPLIER FOR THERMAL EXPANSION COEFFICIENT (CTE)
dL(ENG) = (DIM)*(CTE[1/R])*(TEMP-59)
dL(S) = (DIM)*(CTE[1/K])*(TEMP-15)
***TOLERANCES DO NOT CHANGE

CREO DESIGNS, ENG DPT

TITLE: GLORIOUS CROSS

ARM - RADIAL RIB-1
LWR RIGHT, 8TH SEG

SIZE	DWG. NO.	REV
D	N - 015	1

SCALE: 1:12 SHEET 1 OF 1