ITEM NO.	PART NUMBER	DESCRIPTION	WEIGHT [LBF]	QTY.
1	W14x550 1 20210129		10,714	1
2	Plate w14x550 20210524		577	2
3	bolt 2.75in HD 1 20210524	2.75[IN]-4[TPI], L=15[IN]	34	8
4	nut 2.75in HD 1 20210524			8
5	wash 2.75in HD 1 20210524			16
6	nut 2.75in HD 1 half 20210524	LOCKING NUT		8

TOTAL WEIGHT W/O OXIDATION PROTECTION = 12,228[LBF]

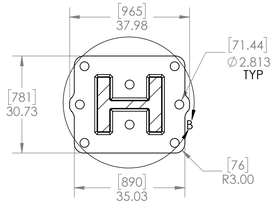

SECTION A-A

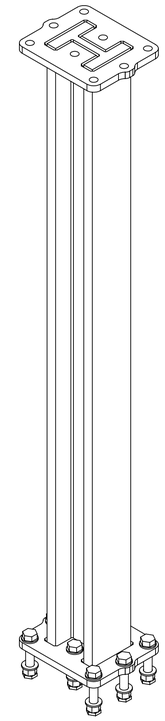

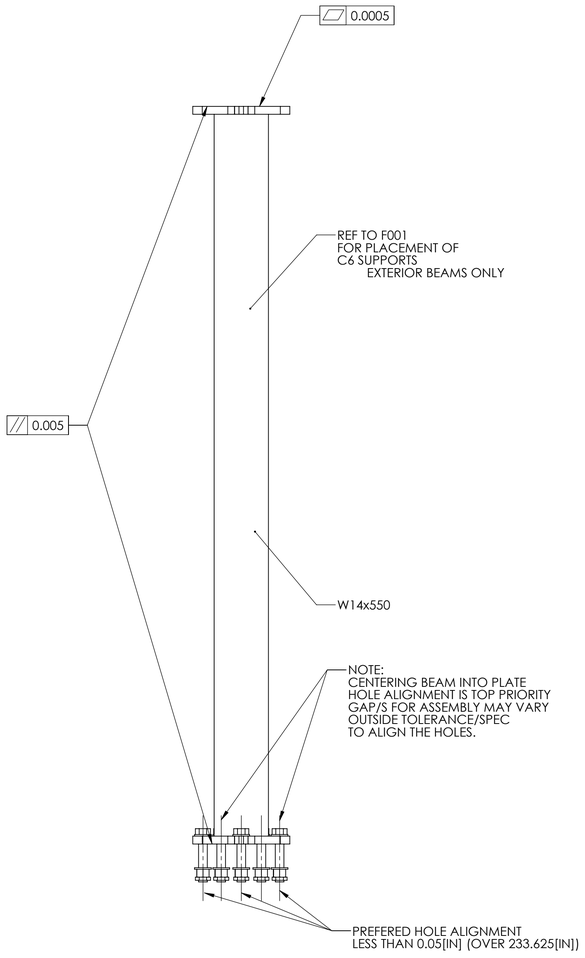

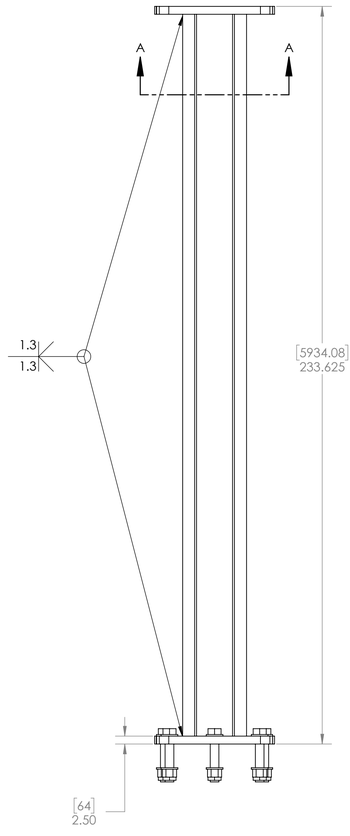

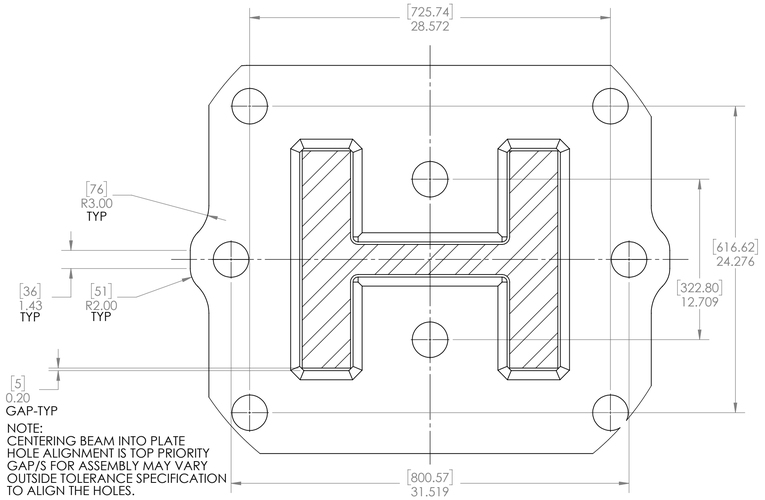

DETAIL B
SCALE 1 : 6

NOTE/S:
NO SHARP EDGES/CORNERS
BEAM/S ASTM 913 G65
PLATE/S AISI 1045, Sy 75[KSI]
OXIDIATION PROTECTION
ALUMINIZATION TYPE II (PREF)
GALV, ASTM 123 G100
MASK MATING SURFACES
MASK BOLT HOLES
POLY-FILM OR OTHER FOR SHIPPING
OIL-SHEEN, SAE 50+ FOR ASM
NO AGGLOMERATION
CAD DATA IS MASTER

EXAMPLE AMBIENT TEMP [F]	EXAMPLE AMBIENT TEMP [C]	T6061-T6 dL PER 1000[IN]	T6061-T6 dL PER 1000[mm]
45.00	7.22	-0.183	-4.658
59.00	15.00	0.0	0.0
86.00	30.00	0.354	8.984

EXAMPLE:
LET DIM = 47.125[IN] (T6061-T6)
dL = 0.000131[86 - 59]47.125
dL = 0.0167[in] (0.4234[mm])

AT 86[F] THE DIMENSION OF THE PART IS 47.125 + 0.0167 =47.142[IN]

GALVONIC PROTECTION REQUIRED:
ALUMINIZE TYPE II PREFERED
GALVINIZE G100 ACCEPTABLE
THERMAL SPRAY AS/FOR ASSEMBLED

UNLESS OTHERWISE SPECIFIED:
TOLERANCES:
DIMENSIONS TAKEN AT 59[F]
DIMENSIONS TAKEN AT 15[C]
FRACTIONAL±0.13[%]
ANGULAR: 0.3[DEG]
TWO PLACE DECIMAL ±0.05[IN]
THREE PLACE DECIMAL ±0.005[IN]
VERIFICATION OF COMPONENTS MUST BE PERFORMED WITH TEMPERATURE COMPENSATION
INTERPRET GEOMETRIC TOLERANCING PER: ASME Y14.5
PARALLEL PLANES MAX 0.002[IN]
FLATNESS MAX 0.002[IN]
FINISH: AS REQUIRED

	NAME	DATE
DRAWN		
CHECKED		
ENG APPR.		
MFG APPR.		
Q.A.		

GAUGE/S:
DRAWINGS ARE AT 59[F] (15[C]): REFER TO MATERIAL SUPPLIER FOR THERMAL EXPANSION COEFFICENT (CTE)
dL(ENG) = (DIM)*(CTE[1/R])*(TEMP-59)
dL(SI) = (DIM)*(CTE[1/K])*(TEMP-15)
***TOLERANCES DO NOT CHANGE

CREO DESIGNS, ENG DPT

TITLE: GLORIOUS CROSS

W14x550 STD BEAM ASM

SIZE	DWG. NO.	REV
D	F - 003	1

SCALE: 1:24 SHEET 1 OF 1