ITEM NO.	PART NUMBER	DESCRIPTION	WEIGHT	QTY.
1	Panel sq 47.125in 20200513 w550 w455 w370 w283 w193 Arm 1			442
2	Rivet Brazier head for Panel 20200510 w550 w455 w370 w283 w193 Arm 1			40664
3	Rib 31 20210118 w550 w455 w370 w283 w193 Arm 1			416
4	L2x2x0.125 3 20210118 w550 w455 w370 w283 w193 Arm 1			416
5	L2x2x0.125 3 20210118 w550 w455 w370 w283 w193 Arm 1			416
6	Plate Pnl sup 2 20210118 w550 w455 w370 w283 w193 Arm 1			416
7	Rivet Brazier 2t +0.0625 20210107 w550 w455 w370 w283 w193 Arm 1			2496
8	Rivet Brazier t+0.313+0.0625 20210104 w550 w455 w370 w283 w193 Arm 1			2496
9	LS6x3.5x0.312 2 20210118 w550 w455 w370 w283 w193 Arm 1			416
10	W6x9 1 20210118 w193 Arm 1			56
11	Plate pnl sup 3 20210118 w550 w455 w370 w283 w193 Arm 1			112
12	Shim Plate 30 1 pnl 20210120 w550 w455 w370 w283 w193 Arm 1			56
13	Shim Plate 30 2 pnl 20210120 w550 w455 w370 w283 w193 Arm 1			56
14	Shim Plate 30 3 pnl 20210120 w550 w455 w370 w283 w193 Arm 1			56
15	Shim Plate 30 4 pnl 20210120 w550 w455 w370 w283 w193 Arm 1			56
16	Plate pnl was 1 20210120 w550 w455 w370 w283 w193 Arm 1			56
17	91286A377			224
18	98180A150			448
19	93827A249			224
20	93839A825			224
21	Rib 32 20210118 w550 w455 w370 w283 w193 Arm 1			442
22	Rivet Brazier 3t 20200514 w550 w455 w370 w283 w193 Arm 1			2652
23	Rivet Brazier head for Panel 20200510 R1			9092
24	Rib Radius 21 20201207 R1			4
25	W6x15 1 20210106 R1			52
26	Plate W6 1 20210106 R1			52
27	Plate W6 2 20210107 R1			104
28	Plate W6 3 20210107 R1			104
29	Plate W6 2 20210107 R1			52
30	Shim Plate W6 1 2021010 R1			52
31	Shim Plate W6 1 2021010 R1			52
32	Shim Plate W6 1 2021010 R1			52
33	Shim Plate W6 1 2021010 R1			52
34	91257A749			208
35	98180A150			416
36	93827A249			416
37	Panel sq 47.125in 20200513 R1			88
38	Rib 16 20210104 R1			88
39	L2x2x0.125 2 20210107 R1			88
40	LS6x6x0.312 1 20210104 R1			88
41	Rivet Brazier t+0.313+0.0625 20210104 R1			528
42	Rivet Brazier 2t +0.0625 20210107 R1			528
43	Plate Pnl sup 1 20210107 R1			88
44	L2x2x0.125 2 20210107 R1			88
45	91257A749			264
46	98180A150			528
47	93827A249			528
48	Rib 17 20210104 R1			48
49	Rivet Brazier 3t 20200514 R1			576
50	Rib 18 20210107 R1			48
51	Rivet Brazier 2t 20200514 R1			384
52	Rib Radius 30 20210120 w550 w455 w370 w283 w193 Arm 1			4
53	Panel sq 19.503in 20210112 R1 2			44
54	Rivet Brazier head for Panel 20200510 R1 2			2816
55	Rib 16 20210104 R1 2			44
56	L2x2x0.125 2 20210107 R1 2			44
57	LS6x6x0.312 1 20210104 R1 2			44
58	Rivet Brazier t+0.313+0.0625 20210104 R1 2			264
59	Rivet Brazier 2t +0.0625 20210107 R1 2			264
60	Plate Pnl sup 1 20210107 R1 2			44
61	L2x2x0.125 2 20210107 R1 2			44
62	Rib 19 20210112 R1 2			88
63	Rivet Brazier 3t 20200514 R1 2			528
64	Rib Radius 22 20201207 R2			4
65	Rivet Brazier head for Panel 20200510 R2			2980
66	Panel sq 47.125in 20200513 R2			16
67	Rib 18 20210107 R2			8
68	Rivet Brazier 3t 20200514 R2			144
69	Rivet Brazier 2t 20200514 R2			64
70	Rib 16 20210104 R2			24
71	L2x2x0.125 2 20210107 R2			24
72	LS6x6x0.312 1 20210104 R2			24
73	Rivet Brazier t+0.313+0.0625 20210104 R2			144
74	Rivet Brazier 2t +0.0625 20210107 R2			144
75	Plate Pnl sup 1 20210107 R2			24
76	L2x2x0.125 2 20210107 R2			24
77	91257A749			48
78	98180A150			96
79	93827A249			96
80	Rib 17 20210104 R2			8
81	Panel sq 19.503in 20210112 R2			8
82	Rib 19 20210112 R2			8
83	Rib Radius 20 20200920 ArmRad			52
84	Rivet Brazier head for Panel 20200510 ArmRad			7072
85	Rib Radius 24 20210115 ArmRad			56
86	Panel sq 19.503in 20210112 R1 std8 B			52
87	Rivet Brazier head for Panel 20200510 R1 std8 B			3328
88	Rib 16 20210104 R1 std8 B			56
89	Rib 32 20210118 w550 w455 w370 w283 w193 Arm 1 cpy			104
90	Rivet Brazier 3t 20200514 w550 w455 w370 w283 w193 Arm 1 cpy			624

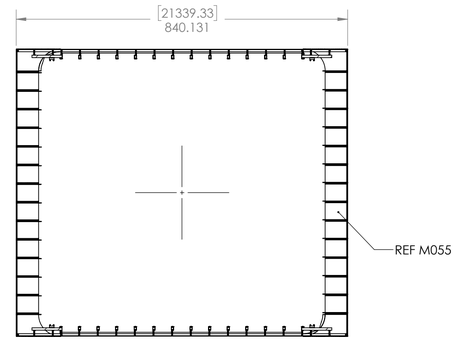

SECTION A-A

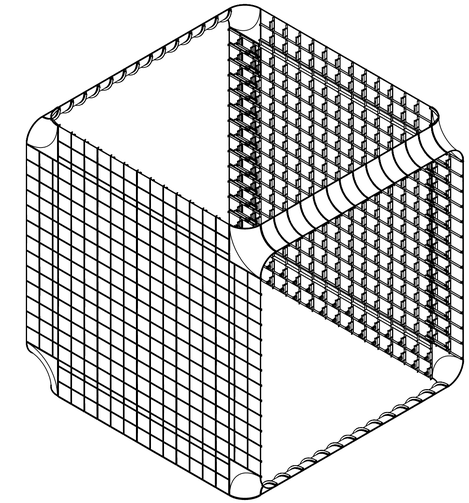

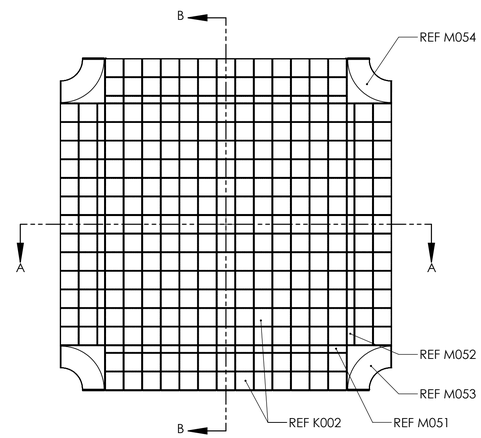

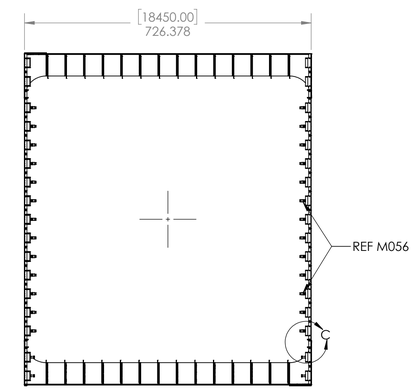

SECTION B-B

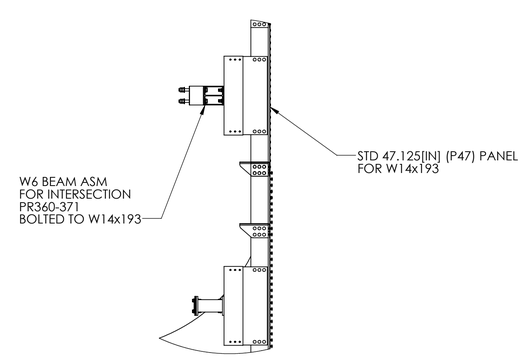

DETAIL C
SCALE 1 : 24

DEFINITION:
INT = INTERSECTION
NO SHARP EDGES/CORNERS
W14/W10, ASTM A913 G65, Sy 65[KSI]
W6-BEAMS, Sy 42[KSI] (PERF A572 G42)
C6-BEAMS, Sy 36[KSI]
AL, T6061-T6, Sy 40[KSI] MIN
AL, ALLOY, Sy 40[KSI] MIN
PLATE/S AISI 1045, Sy 75[KSI] (MIN)
ALUMINIZATION TYPE II (PREF)
GALVINIZE ASTM A123 G100 ACCPTABLE
MASKING OF MATING SURFACES
OIL-SHEEN, SAE 50+, PRIOR TO ASM
NO AGGLOMERATION OF OIL
AL/ALLOY TO STEEL INTERFACE, POLYMER FILM OR OTHER
MINIMIZE/NEUTRALIZE IONIC EXHANGE
BOLT/S ASM G8
CLASS B, AS-BUILT
CAD/DATA IS MASTER

EXAMPLE AMBIENT TEMP [F]	EXAMPLE AMBIENT TEMP [C]	T6061-T6 dL PER 1000[IN]	T6061-T6 dL PER 1000[mm]
45.00	7.22	-0.183	-4.658
59.00	15.00	0.0	0.0
86.00	30.00	0.354	8.984

EXAMPLE:
LET DIM = 47.125[IN] (T6061-T6)
dL = 0.000013*[86 - 59]*47.125
dL = 0.01675[IN] [0.4254][mm]]

AT 86[F] THE DIMENSION OF THE PART IS 47.125 + 0.0167 =47.142[IN]

GALVONIC PROTECTION REQUIRED:
ALUMINIZE TYPE II PREFERED
GALVINIZE G100 ACCEPTABLE
THERMAL SPRAY AS/FOR ASSEMBLED

UNLESS OTHERWISE SPECIFIED:
TOLERANCES:
DIMENSIONS TAKEN AT 59[F]
DIMENSIONS TAKEN AT 15[C]
FRACTIONAL±0.13[IN]
ANGULAR: 0.3[DEG]
TWO PLACE DECIMAL ±0.05[IN]
THREE PLACE DECIMAL ±0.005[IN]

VERIFICATION OF COMPONENTS MUST BE PERFORMED WITH TEMPERATURE COMPENSATION

INTERPRET GEOMETRIC TOLERANCING PER: ASME Y14.5

PARALLEL PLANES MAX 0.002[IN]
FLATNESS MAX 0.002[IN]
FINISH: AS REQUIRED

GAUGE/S:
DRAWINGS ARE AT 59[F] (15[C]): REFER TO MATERIAL SUPPLIER FOR THERMAL EXPANSION COEFFICENT (CTE)
dL[ENG] = (DIM)*(CTE[1/R])*(TEMP-59)
dL[SI] = (DIM)*(CTE[1/K])*(TEMP-15)
***TOLERANCES DO NOT CHANGE

	NAME	DATE
DRAWN		
CHECKED		
ENG APPR.		
MFG APPR.		
Q.A.		

CREO DESIGNS, ENG DPT

TITLE: GLORIOUS CROSS

INT - MAIN PANEL/SKIN ARRAY/ASM

SIZE	DWG. NO.	REV
D	M - 050	1

SCALE: 1:192 SHEET 1 OF 1