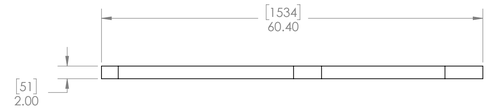

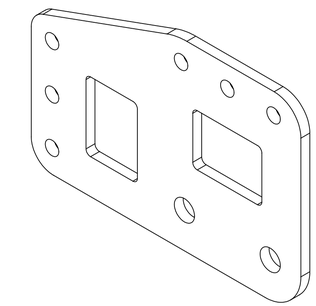

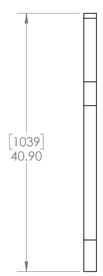

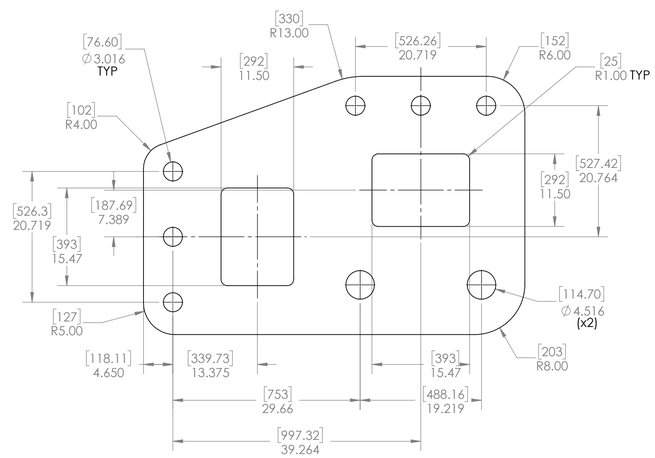

NOTE/S:
DEFINITION:
INT = INTERSECTION
NO SHARP EDGES/CORNERS
AL, T6061-T6, Sy 40[KSI] MIN
AL, ALLOY, Sy 40[KSI] MIN
CLASS B, AS-BUILT
CAD/DATA IS MASTER

EXAMPLE AMBIENT TEMP [F]	EXAMPLE AMBIENT TEMP [C]	T6061-T6 dL PER 1000[IN]	T6061-T6 dL PER 1000[mm]
45.00	7.22	-0.183	-4.658
59.00	15.00	0.0	0.0
86.00	30.00	0.354	8.984

EXAMPLE:
LET DIM = 47.125[IN] [T6061-T6]
dL = 0.0000131[IN / -59]47.125
dL = 0.0167[IN] [0.4234][mm]

AT 86[F] THE DIMENSION OF THE PART IS 47.125 + 0.0167 =47.142[IN]

GALVONIC PROTECTION REQUIRED:
ALUMINIZE TYPE II PREFERED
CALVINIZE G100 ACCEPTABLE
THERMAL SPRAY AS/FOR ASSEMBLED

UNLESS OTHERWISE SPECIFIED:
TOLERANCES:
DIMENSIONS TAKEN AT 59[F]
DIMENSIONS TAKEN AT 15[C]
FRACTIONAL ±0.13[75]
ANGULAR: 0.3[DEG]
TWO PLACE DECIMAL ±0.05[IN]
THREE PLACE DECIMAL ±0.005[IN]

VERIFICATION OF COMPONENTS MUST BE PERFORMED WITH TEMPERATURE COMPENSATION

INTERPRET GEOMETRIC TOLERANCING PER: ASME Y14.5

PARALLEL PLANES MAX 0.002[IN]
FLATNESS MAX 0.002[IN]
FINISH: AS REQUIRED

GAUGE/S:
DRAWINGS ARE AT 59[F] (15[C]); REFER TO MATERIAL SUPPLIER FOR THERMAL EXPANSION COEFFICENT (CTE)

dL(IN0) = (DIM)*(CTE)(-K)*(TEMP-59)
dL(S) = (DIM)*(CTE)(-K)*(TEMP-15)
***TOLERANCES DO NOT CHANGE

	NAME	DATE
DRAWN		
CHECKED		
ENG APPR.		
MFG APPR.		
Q.A.		

CREO DESIGNS, ENG DPT

TITLE: GLORIOUS CROSS

INT - C139 UPPER LEFT CORNER BASE PLATE

SIZE	DWG. NO.	REV
D	M - 043	1

SCALE: 1:12 | SHEET 1 OF 1