ITEM NO.	PART NUMBER	DESCRIPTION	WEIGHT	QTY.
1	Rib 34 20210421 S	LOWER RIB FOR PR1 MATERIAL AL T6061-T6	5.05	1
2	Rivet Brazier 3t 20200514 S	(3/8)[IN] BRAZIER HEAD RIVET WORKING THICKNESS (WT) 0.375[IN]	0.0146	3

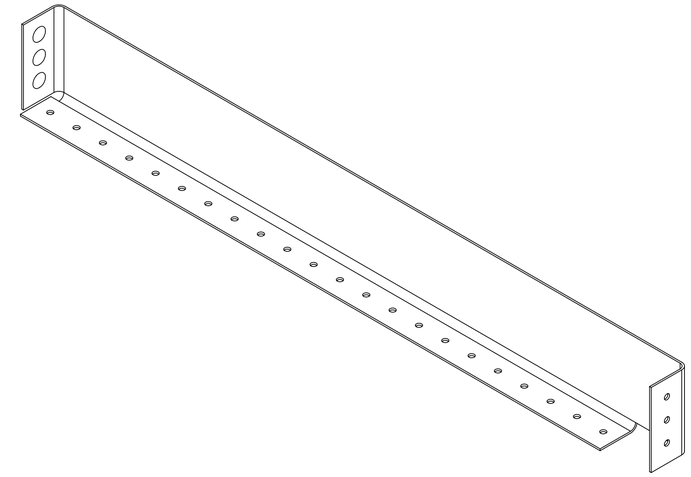

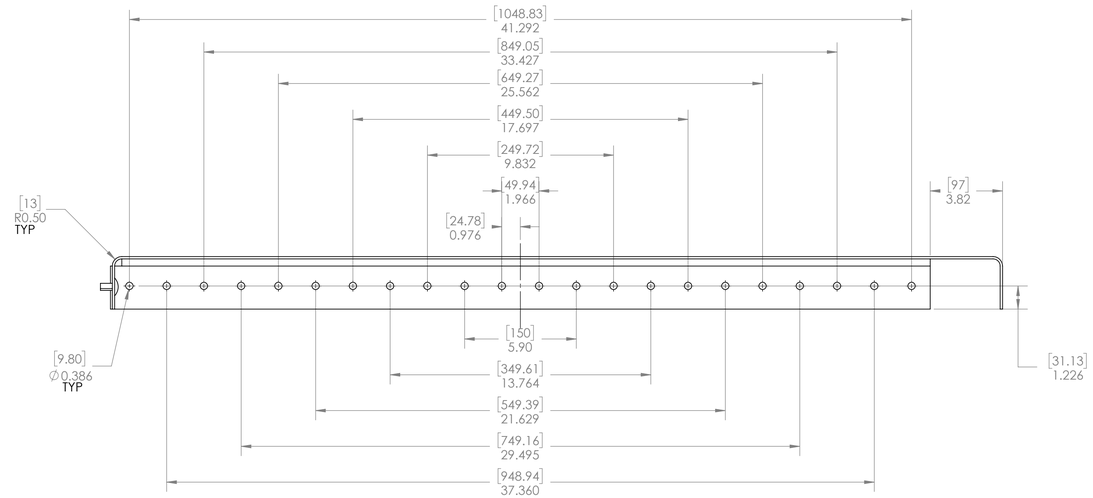

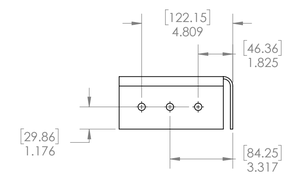

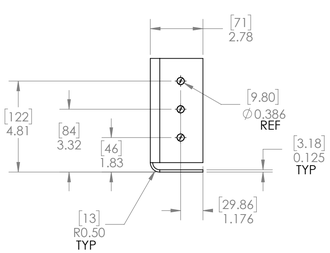

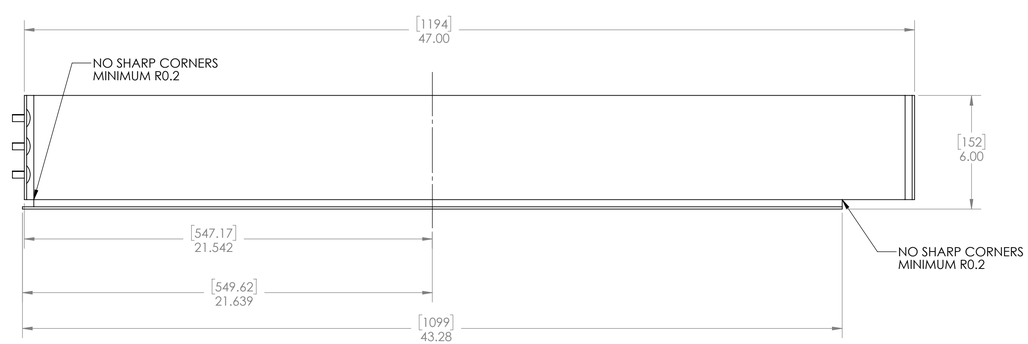

NOTES:
NO SHARP EDGES
MATERIAL:
T6061-T6, Sy 40[KSI]
RIVETS AL ALLOY
MATING SURFACES
FLATNESS/WARP LESS THAN 0.03[IN]
ASSEMBLY WITHOUT REWORK
CLASS B SURFACE AS BUILT
USED ON PR-1, FIRST PANEL ROW, ONLY

EXAMPLE AMBIENT TEMP [T]	EXAMPLE AMBIENT TEMP [C]	T6061-T6 dL PER 1000[IN]	T6061-T6 dL PER 1000[mm]
45.00	7.22	-0.183	-4.658
59.00	15.00	0.0	0.0
86.00	30.00	0.354	8.984

EXAMPLE:
LET DIM = 47.125[IN] (T6061-T6)
dL = 0.000013 [86 - 59]47.125
dL = 0.0167[IN] [0.4234[mm]]

AT 86[T] THE DIMENSION OF THE PART IS 47.125 + 0.0167 =47.142[IN]

GALVONIC PROTECTION REQUIRED:
ALUMINIZE TYPE II PREFERED
GALVINIZE G100 ACCEPTABLE
THERMAL SPRAY AS/FOR ASSEMBLED

UNLESS OTHERWISE SPECIFIED:
TOLERANCES:
DIMENSIONS TAKEN AT 59[F]
DIMENSIONS TAKEN AT 15[C]
FRACTIONAL±0.13[15]
ANGULAR: 0.3[DEG]
TWO PLACE DECIMAL ±0.05[IN]
THREE PLACE DECIMAL ±0.005[IN]

VERIFICATION OF COMPONENTS MUST BE PERFORMED WITH TEMPERATURE COMPENSATION

INTERPRET GEOMETRIC TOLERANCING PER: ASME Y14.5

PARALLEL PLANES MAX 0.002[IN]
FLATNESS MAX 0.002[IN]
FINISH: AS REQUIRED

GAUGE/S:
DRAWINGS ARE AT 59[F] (15[C]): REFER TO MATERIAL SUPPLIER FOR THERMAL EXPANSION COEFFICENT (CTE)
dL(ENG) = (DIM)*(CTE(I)/R)*(TEMP-59)
dL(S) = (DIM)*(CTE(I)/R)*(TEMP-15)
***TOLERANCES DO NOT CHANGE

	NAME	DATE
DRAWN		
CHECKED		
ENG APPR.		
MFG APPR.		
Q.A.		

CREO DESIGNS, ENG DPT

TITLE: GLORIOUS CROSS

RIB - PANEL/SKIN - 2
LOWER ONLY

SIZE	DWG. NO.	REV
D	C - 003	1

SCALE: 1:4 | SHEET 1 OF 1