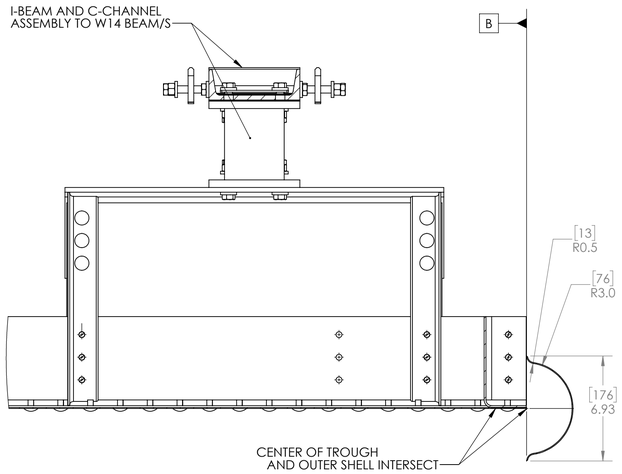

DETAIL C
SCALE 1 : 5

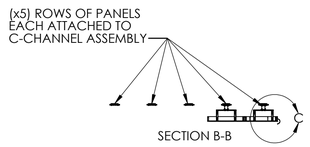

SECTION B-B

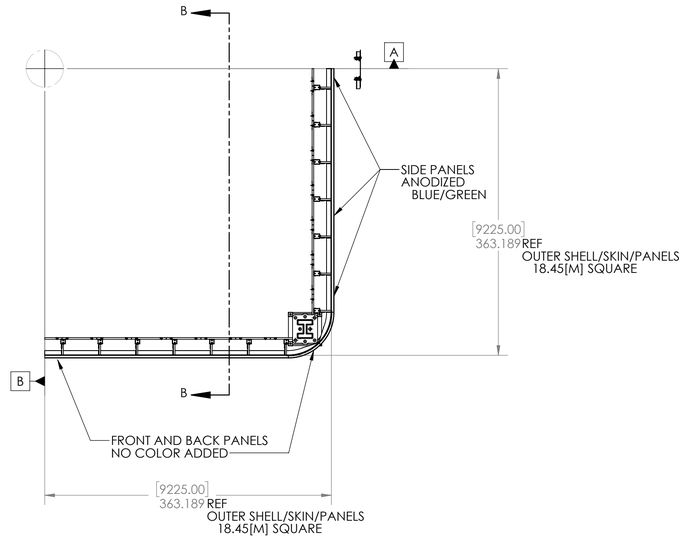

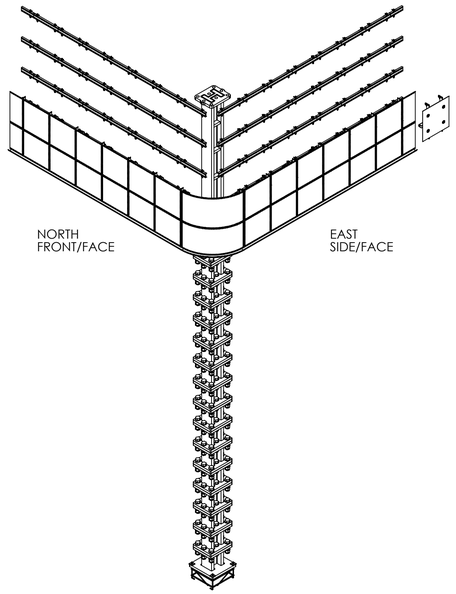

QUARTER MODEL
MIRRORED < Y-Z > AND < X-Y > PLANES
MIRRORED ABOUT [A] AND [B] DATUMS

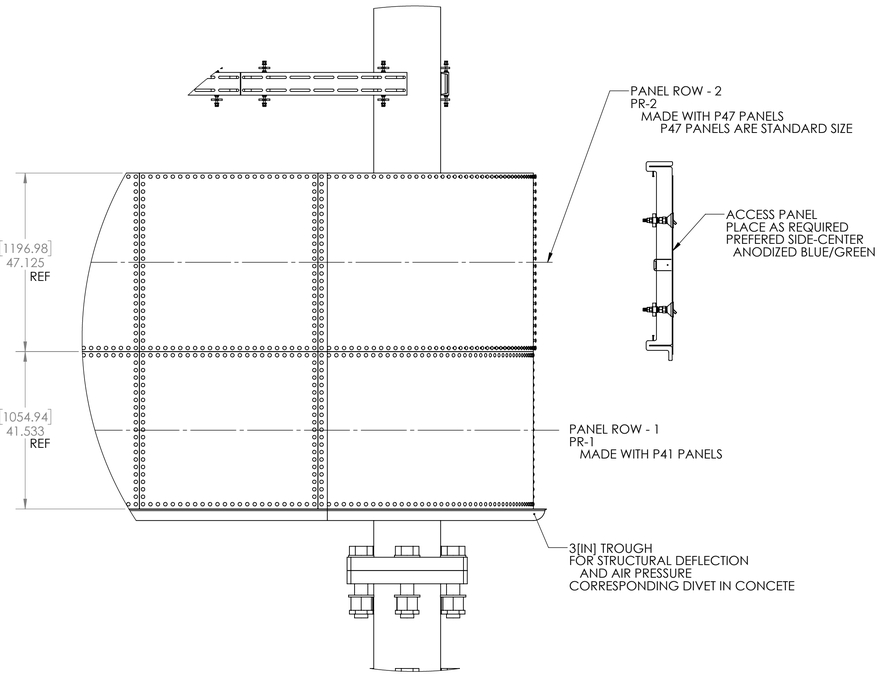

DETAIL A
SCALE 1 : 20

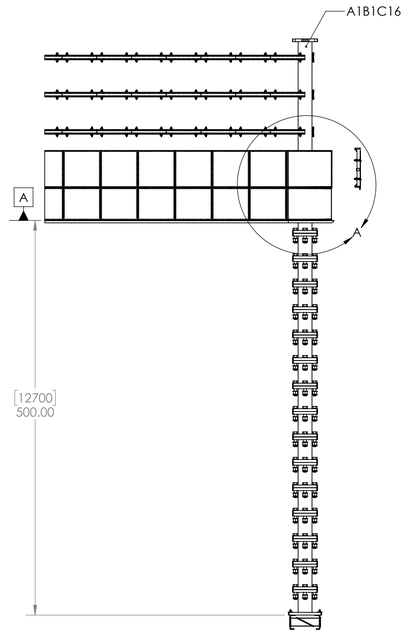

NOTES:
SHELL/PANEL/SKIN MATERIAL AL T6061-T6 STD
FLATNESS/WARP LESS THAN 0.001[IN]
EXTERIOR/OUTSIDE SURFACE IS CLASS A
EXTERIOR/OUTSIDE SURFACE BRUSH PATTERN
RANDONM MULTI-CIRCULAR/SWIRL
MAXIMUM DEPTH 115[MICRO-IN]
SIDE PANELS ONLY
ANODIZED BLUE/GREEN
RGB DEFINED AS 26.4, 48.7, 54.6
VISUAL AND DIGITAL VERIFICATION IN NATURAL LIGHT
INTERIOR SURFACES ARE CLASS B
UNSEEN AFTER CONSTRUCTION

EXAMPLE AMBIENT TEMP [F]	EXAMPLE AMBIENT TEMP [C]	T6061-T6 dL PER 1000[IN]	T6061-T6 dL PER 1000[mm]
45.00	7.22	-0.183	-4.658
59.00	15.00	0.0	0.0
86.00	30.00	0.354	8.984

EXAMPLE:
LET DIM = 47.125[IN] (T6061-T6)
dL = 0.0000131[86 - 59]47.125
dL = 0.0167[IN] (0.4234[mm])

AT 86[F] THE DIMENSION OF THE PART IS 47.125 + 0.0167 =47.142[IN]

GALVONIC PROTECTION REQUIRED:
ALUMINIZE TYPE II PREFERED
GALVINIZE G100 ACCEPTABLE
THERMAL SPRAY AS/FOR ASSEMBLED

UNLESS OTHERWISE SPECIFIED:

TOLERANCES:
DIMENSIONS TAKEN AT 59[F]
DIMENSIONS TAKEN AT 15[C]
FRACTIONAL ±0.13[%]
ANGULAR: 0.3[DEG]
TWO PLACE DECIMAL ±0.05[IN]
THREE PLACE DECIMAL ±0.005[IN]

VERIFICATION OF COMPONENTS MUST BE PERFORMED WITH TEMPERATURE COMPENSATION

INTERPRET GEOMETRIC TOLERANCING PER: ASME Y14.5

PARALLEL PLANES MAX 0.002[IN]
FLATNESS MAX 0.002[IN]
FINISH: AS REQUIRED

	NAME	DATE
DRAWN		
CHECKED		
ENG APPR.		
MFG APPR.		
Q.A.		

GAUGE/S:
DRAWINGS ARE AT 59[F] (15[C]): REFER TO MATERIAL SUPPLIER FOR THERMAL EXPANSION COEFFICIENT (CTE)
dL(ENG) = (DIM)*(CTE[1/R])*(TEMP-59)
dL(SI) = (DIM)*(CTE[1/K])*(TEMP-15)
***TOLERANCES DO NOT CHANGE

CREO DESIGNS, ENG DPT

TITLE: GLORIOUS CROSS

SHELL/SKIN BASE
ASSEMBLY - 1

SIZE	DWG. NO.	REV
D	B - 013	1

SCALE: 1:96 SHEET 1 OF 1