ITEM NO.	PART NUMBER	DESCRIPTION	WEIGHT [Lbf]	QTY.	
1	Level guide 1 20210428 S1	FIXTURE FOR BEAM LEVELING	33.5	1	(x64) RECOMMENDED (x21) MINIMUM

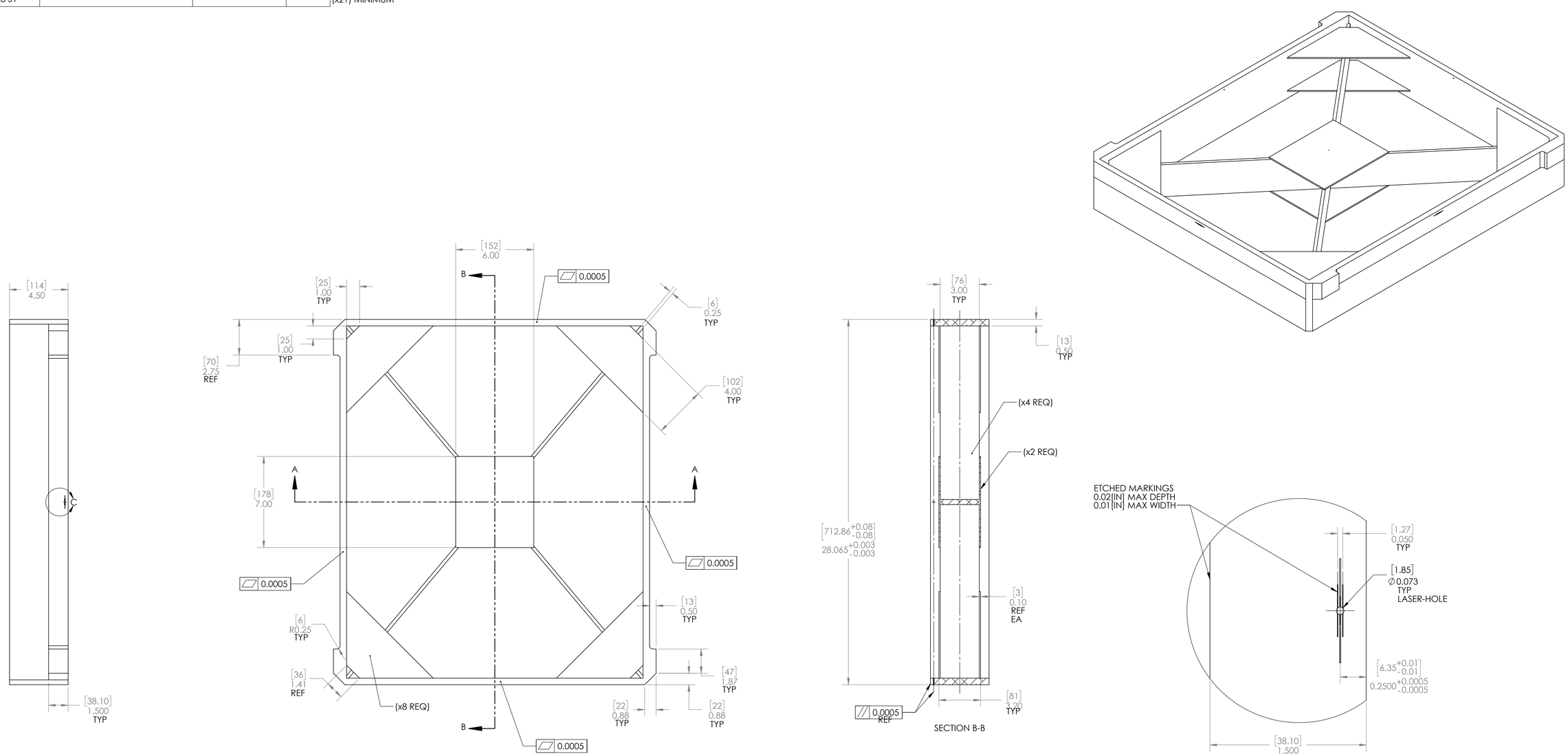

NOTES:
MATERIAL: ALUMINUM ALLOY, T6061-T6 PREFERED
NO SHARP EDGES, DULLED TO MINIMUM (1/128)"
NORMAL HANDELING AND PLACEMENT
CANNOT ALTER FIXTURE. DROP FROM 3[FT] WITHOUT ALTERING FLATNESS AND PARELLELISM.
ALL WELDS ARE AT THE DESCRETION OF THE SUPPLIER.
SHOULD TOLERANCES BE TOO TIGHT
SUPPLIER TO STATE & QUOTE PER THEIR TIGHTEST

EXAMPLE AMBIENT TEMP [F]	EXAMPLE AMBIENT TEMP [C]	T6061-T6 dL PER 1000[IN]	T6061-T6 dL PER 1000[mm]
45.00	7.22	-0.183	-4.658
59.00	15.00	0.0	0.0
86.00	30.00	0.354	8.984

EXAMPLE:
LET DIM = 47.125[IN] [T6061-T6]
dL = 0.000131[86 - 59]47.125
dL = 0.0167[in] [0.4234[mm]]

AT 86[F] THE DIMENSION OF THE PART IS 47.125 + 0.0167 =47.142[IN]

GALVONIC PROTECTION REQUIRED:
ALUMINIZE TYPE II PREFERED
GALVINIZE G100 ACCEPTABLE
THERMAL SPRAY AS/FOR ASSEMBLED

UNLESS OTHERWISE SPECIFIED:
TOLERANCES:
DIMENSIONS TAKEN AT 59[F]
DIMENSIONS TAKEN AT 15[C]
FRACTIONAL ±0.13[%]
ANGULAR: 0.3[DEG]
TWO PLACE DECIMAL ±0.05[IN]
THREE PLACE DECIMAL ±0.005[IN]
VERIFICATION OF COMPONENTS MUST BE PERFORMED WITH TEMPERATURE COMPENSATION
INTERPRET GEOMETRIC TOLERANCING PER: ASME Y14.5
PARALLEL PLANES MAX 0.002[IN]
FLATNESS MAX 0.002[IN]
FINISH: AS REQUIRED

	NAME	DATE
DRAWN		
CHECKED		
ENG APPR.		
MFG APPR.		
Q.A.		

GAUGE/S:
DRAWINGS ARE AT 59[F] (15[C]): REFER TO MATERIAL SUPPLIER FOR THERMAL EXPANSION COEFFICIENT (CTE)
dL(ENG) = (DIM)*(CTE[1/K])*(TEMP-59)
dL(SI) = (DIM)*(CTE[1/K])*(TEMP-15)
***TOLERANCES DO NOT CHANGE

CREO DESIGNS, ENG DPT

TITLE: GLORIOUS CROSS

LEVELING GAUGE 1

SIZE	DWG. NO.	REV
D	B - 007	1

SCALE: 1:4 SHEET 1 OF 1